TS-A172CI/XAEW5 THF5460-A/CN

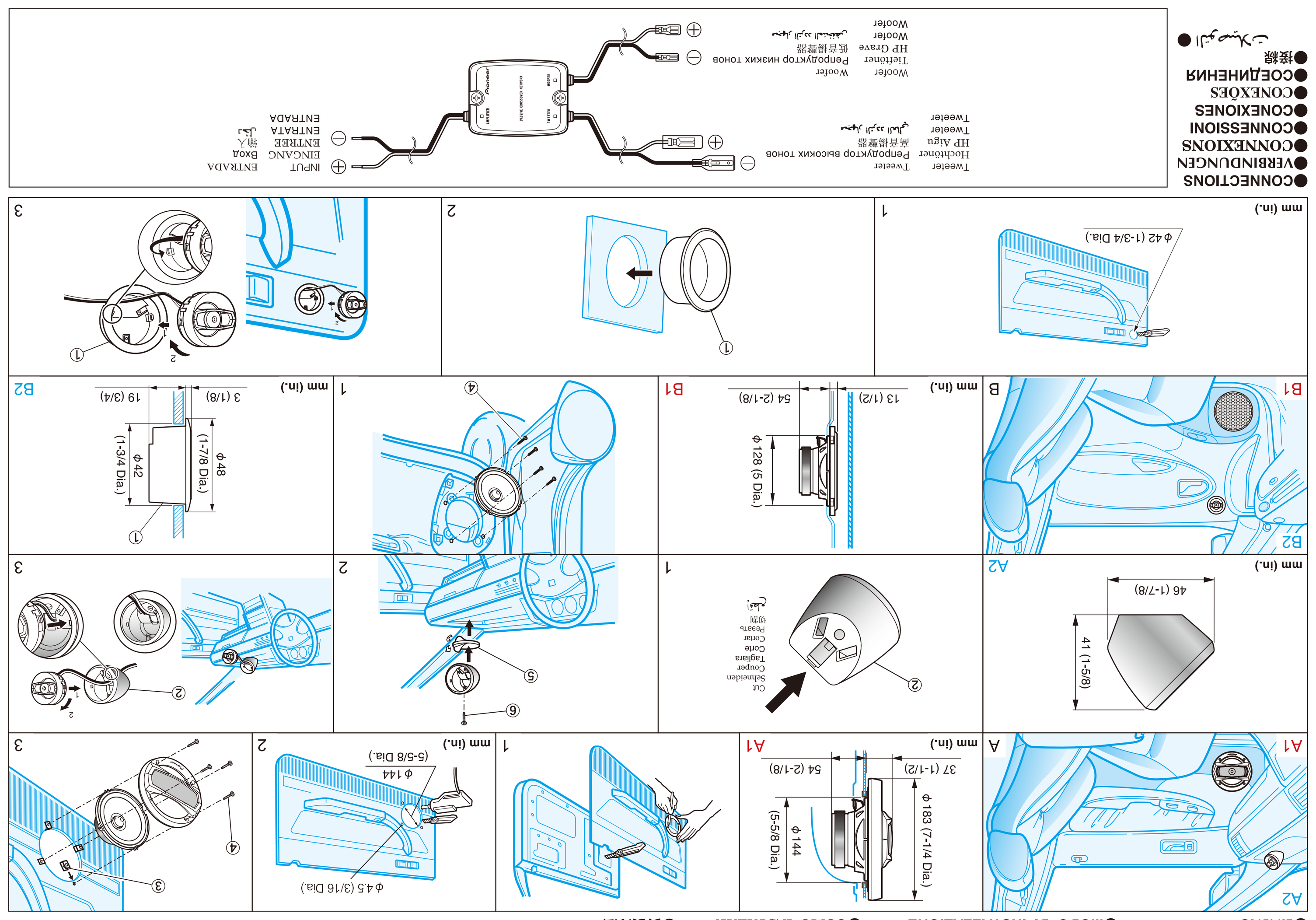

TS-A172CI 350W MAX.

Be sure to read this instruction manual before installing this speaker.
Vor dem Einbau des Lautsprecher, verfehlen Sie nicht diese Vorschrift zu lesen.
Prière de lire obligatoirement ce manuel d'installation avant de monter les haut-parleurs.
Prima di installare l'altoparlante leggete tassativamente le istruzioni.
Antes de instalar el altavoz es importante que lea estas instrucciones.
Leia este manual de instruções antes de instalar o alto-falante.
Обязательно прочитайте это руководство перед подключением динамика.
安裝揚聲器前，務須先看本使用說明書。

●FEATURES
1. HIGH SENSITIVITY & HIGH POWER HANDLING DESIGN
2. MULTILAYER MICA MATRIX CONE
3. LIGHT WEIGHT ELASTIC POLYMER SURROUND
4. φ 16 cm (6-1/2" Dia.) COMPATIBLE BASKET DESIGN
5. φ 20 mm (3/4" Dia.) SOFT DOME TWEETER WITH WAVE GUIDE ENERGY FOCUSING DESIGN
6. EXTERNAL PASSIVE CROSSOVER NETWORK (6 000 Hz, -6 dB/oct. LPF, -6 dB/oct. HPF)

Packaged Component Speaker System
Flush-Mount 17 cm (6-3/4") WOOFER
Flush/Surface Mount 20 mm (3/4") SOFT DOME TWEETER

Ensemble De Haut-Parleurs Component
HP GRAVE DE 17 cm À Montage Encastré
HP D'AIGU À DÔME SOUPLE DE 20 mm À Montage Encastré/en Surface

© PIONEER CORPORATION 2012 MADE IN CHINA FABRIQUÉ EN CHINE FABBRICATO IN CINA FEITO EM PORCELANA СДЕЛАНО В КИТАЕ
PIONEER CORPORATION 1-1, Shin-ogura, Saiwai-ku, Kawasaki-shi, Kanagawa 212-0031, JAPAN / JAPON
PIONEER EUROPE NV Haven 1087, Keetberglaan 1, B-9120 Melsele, Belgium / Belgique

TS-A172CI
Separate 2-Way
•MAX. MUSIC POWER 350 W
•NOMINAL POWER 60 W
•WOOFER Ø165 mm
•TWEETER Ø20 mm SOFT DOME
•IMPEDANCE 4 OHMS
•SENSITIVITY 90 dB (±1.5 dB)
•FREQUENCY RESPONSE 34 Hz TO 32 kHz (−20 dB)
•GROSS WEIGHT 2.50 kg 5 lb 8 oz

350W MAX / 2 WAY VOIES SEPARATE/SÉPARÉES / 17cm

●PARTS INCLUDED
●PIECES COMPRISES

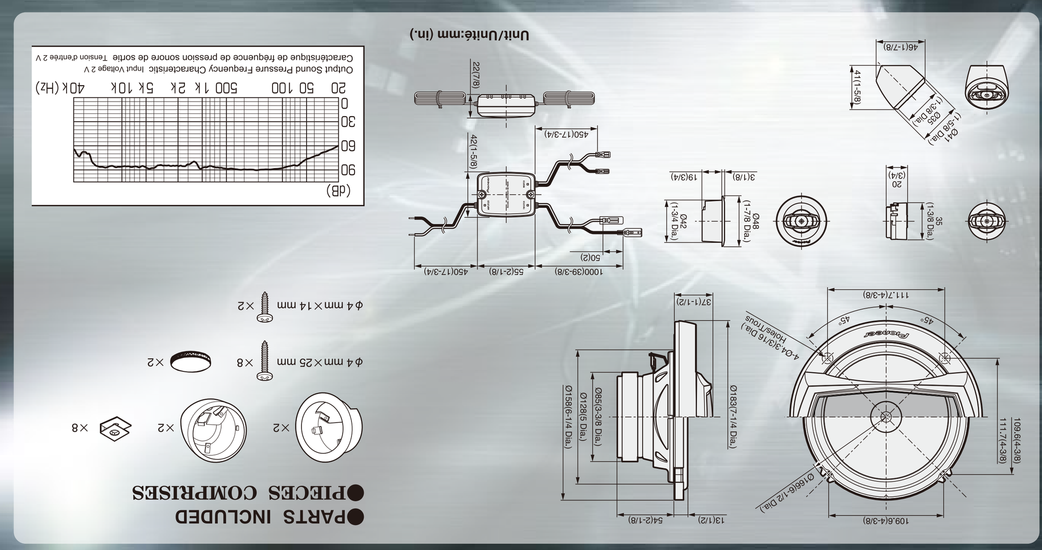

XAEW5 1 PAIR

PIONEER CORPORATION

Pioneer

TS-A172CI
HP 2 Voies Séparées
350W MAX / 2 WAY VOIES SEPARATE/SÉPARÉES / 17cm

4 988028 187568

Pioneer

350W MAX / 2 WAY VOIES SEPARATE/SÉPARÉES / 17cm

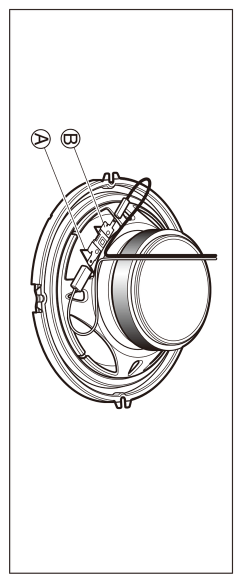

TS-A172CI

Separate 2-Way / HP 2 Voies Séparées
2 Vie Separate / 2 Vias Separadas
Раздельная двухсторонняя система

MULTILAYER MICA MATRIX CONE

TS-A172CI
Separate 2-Way
Раздельная двухсторонняя система

350W MAX / 2 WAY VOIES SEPARATE/SÉPARÉES / 17cm

Pioneer

THF5460-A/CN

TS-A172CI

HP 2 Voies Séparées

- •PUISSANCE MUSICALE MAXIMUM 350 W
- •PUISSANCE NOMINALE 60 W
- •HP GRAVE Ø165 mm
- •HP AIGU Ø20 mm DÔME SOUPLE
- •IMPEDANCE 4 OHMS
- •SENSIBILITE 90 dB (±1,5 dB)
- •BANDE PASSANTE 34 Hz À 32 kHz (−20 dB)
- •POIDS BRUT 2,50 kg

MULTILAYER MICA MATRIX CONE

Pioneer

350W MAX / 2 WAY VOIES SEPARATE/SÉPARÉES / 17cm

PIONEER CORPORATION

XAEW5
1 PAIRE

●SPECIFICATIONS
· Speaker specifications
Woofer .... φ165 mm (6-1/2" Dia.) Multilayer mica matrix cone, Light weight elastic polymer surround, Heat-resistant voice coil, Strontium magnet : 330 g (12 oz)
Tweeter .... φ20 mm (3/4" Dia.) Soft dome, Light weight diaphragm, Magnetic fluid, Neodymium magnet : 5 g (0.2 oz)
· Nominal impedance .... 4 Ω
· Maximum music power .... 350 W
· Nominal power .... 60 W
· Crossover frequency .... 6 000 Hz
Woofer .... LOW PASS FILTER (LPF) −6 dB/oct.
Tweeter .... HIGH PASS FILTER (HPF) −6 dB/oct.
· Grille material .... Steel net, heat-proof resin
· Weight (per speaker including accessory parts) .... 1.07 kg (2 lb 6 oz)
· Gross weight (2 speakers including packaging) .... 2.50 kg (5 lb 8 oz)