TCD200FX(e-e).book Page 1 Monday, February 7, 2005 1:19 PM

Panasonic

Operating Instructions

Digital Cordless Phone

Model No. **KX-TCD200FX**

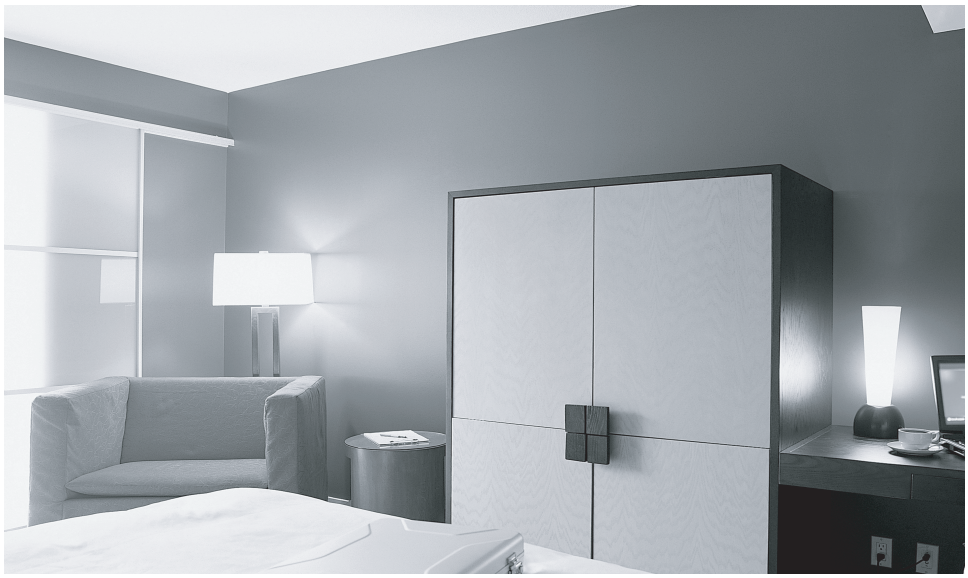

This unit is Caller ID compatible. To display the caller's phone number, you must subscribe to Caller ID service.

Charge the batteries for about 7 hours before initial use.

Please read these operating instructions before using the unit and save them for future reference.

TCD200FX(e-e).book Page 2 Monday, February 7, 2005 1:19 PM

Introduction

Thank you for purchasing a new Panasonic digital cordless phone.

For your future reference
Attach or keep original receipt to assist with any repair under warranty.

Serial No. (found on the bottom of the base unit)
Date of purchase
Name and address of dealer

Note:

- In the event of problems, you should contact your equipment supplier in the first instance.

Declaration of Conformity:

- Panasonic Communications Co., Ltd. declares that this equipment is in compliance with the essential requirements and other relevant provisions of Radio & Telecommunications Terminal Equipment (R&TTE) Directive 1999/5/EC.

  Declarations of Conformity for the relevant Panasonic products described in this manual are available for download by visiting:

  http://www.doc.panasonic.de

  Contact:

  Panasonic Services Europe GmbH

  Panasonic Testing Centre

  Winsbergring 15, 22525 Hamburg, F.R. Germany

TCD200FX(e-e).book Page 3 Monday, February 7, 2005 1:19 PM

Preparation

Accessory information 4
Important information 5
Controls and displays 6
Connections 7
Battery installation 8
Battery charge 8
Battery replacement 9
Turning the power on/off. 9
Display language 9
Setting dialling mode (tone/pulse) 10
Setting the date and time 10

Making/Answering Calls

Making calls 11
Answering calls 13

Phonebook

Using the phonebook 14
Copying phonebook entries to other handsets. 16

Handset Settings

Guide to handset settings. 17
Time settings 18
Ringer setup. 18
Night mode. 19
Display setup 20
Call options. 21
Other options 21

Base Unit Settings

Guide to base unit settings. 23
Ringer setup. 24
Call options. 25
Other options 26

Caller ID Service

Using Caller ID service. 28
Caller list. 28

Multi-unit Operation

Operating additional units. 30
Registering a handset to a base unit . . .30
Intercom between handsets 32
Transferring calls between handsets . . .33

Useful Information

Wall mounting 34
Available character entries. 35
Troubleshooting 37
Specifications. 40

Index

Index 41

TCD200FX(e-e).book Page 4 Monday, February 7, 2005 1:19 PM

Accessory information

Included accessories

AC adaptor PQLV19CE 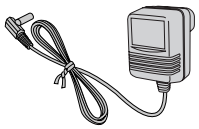	Telephone line cord 	Rechargeable batteries AAA (R03)size HHR-4EPT
Handset cover 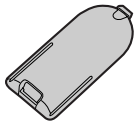	Operating instructions 	

Additional/replacement accessories

Model No.	Description
P03P	2 rechargeable nickel metal hydride (Ni-MH) batteries
KX-TCA120FX	Additional Digital Cordless Handset
KX-A272	DECT repeater

TCD200FX(e-e).book Page 5 Monday, February 7, 2005 1:19 PM

Important information

General

- Use only the AC adaptor included with this product, noted on page 4.
- Do not connect the AC adaptor to any AC outlet other than a standard 220–240 V AC outlet.
- This product is unable to make calls when:
  - The portable handset battery(ies) need recharging or have failed.
  - There is a power failure.
  - The key lock feature is turned on.
  - The call bar feature is turned on (only phone numbers stored in the unit as emergency numbers can be called).
- Do not open the base unit or handset other than to replace the battery(ies).
- This product should not be used near emergency/intensive care medical equipment and should not be used by people with pacemakers.
- Care should be taken that objects do not fall onto, and liquids are not spilled into, the unit. Do not subject this product to excessive smoke, dust, mechanical vibration or shock.

Environment

- Do not use this product near water.
- This product should be kept away from heat sources such as radiators, cookers, etc. It should also not be placed in rooms where the temperature is less than 5 °C or greater than 40 °C.
- The AC adaptor is used as the main disconnect device. Ensure that the AC outlet is installed near the unit and is easily accessible.

Warning:

- To prevent the risk of electrical shock, do not expose this product to rain or any other type of moisture.
- Unplug this unit from power outlets if it emits smoke, an abnormal smell or makes unusual noise. These conditions can cause fire or electric shock. Confirm that smoke has stopped and contact an authorised service centre.

Location

- For maximum distance and noise-free operation, place your base unit:
  - Away from electrical appliances such as TVs, radios, personal computers or other phones.
  - In a convenient, high and central location.

Battery caution

- We recommend using the battery(ies) noted on page 4. **Use only rechargeable battery(ies).**
- Do not mix old and new batteries.
- Do not dispose of the battery(ies) in a fire, as they may explode. Check local waste management codes for special disposal instructions.
- Do not open or mutilate the battery(ies). Released electrolyte from the battery(ies) is corrosive and may cause burns or injury to the eyes or skin. The electrolyte may be toxic if swallowed.
- Exercise care when handling the battery(ies). Do not allow conductive materials such as rings, bracelets or keys to touch the battery(ies), otherwise a short circuit may cause the battery(ies) and/or the conductive material to overheat and cause burns.
- Charge the battery(ies) in accordance with the information provided in these operating instructions.
- Only use the included base unit (or charger) to charge the battery(ies). Do not tamper with the base unit (or charger). Failure to follow these instructions may cause the battery(ies) to swell or explode.

TCD200FX(e-e).book Page 6 Monday, February 7, 2005 1:19 PM

Controls and displays

Controls

Handset

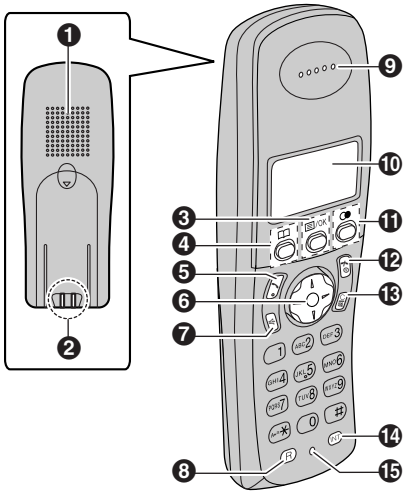

❶ **Speaker**
❷ **Charge contact**
❸ **【☰/OK】(Menu/OK)**
❹ **【📖】(Phonebook)**
❺ **【↷】(Talk)**
❻ **Navigator key**
- **【▲】【▼】**: To search for the desired item in menus.
- **【▶】**: To select the desired item or move the cursor to the right.
- **【◀】**: To return to the previous screen or move the cursor to the left.

❼ **【🔊】(Speakerphone)**
❽ **【R】(Recall)**
❾ **Receiver**
❿ **Display**
⓫ **【↻】(Redial/Pause)**
⓬ **【⏻】(Off/Power)**
⓭ **【C/🔇】(Clear/Mute)**
⓮ **【INT】(Intercom)**
⓯ **Microphone**

Note:
- Up to 3 menu items can be displayed at a time. To select a menu item not shown on the current page, scroll up or down by pressing the navigator key, **【▲】** or **【▼】**, respectively.

Base unit

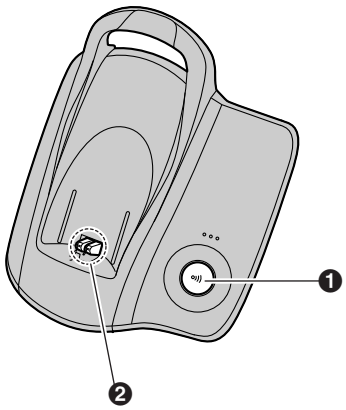

❶ **【📢】(Page)**
❷ **Charge contact**

TCD200FX(e-e).book Page 7 Monday, February 7, 2005 1:19 PM

Displays

Display icons

Various icons appear on the handset display to indicate the current status of the unit.

Display icon	Meaning
Y	Within range of a base unit ● When flashing: Handset is searching for base unit. (out of range of base unit, handset is not registered to base unit, no power on base unit)
)))	Handset is accessing base unit. (intercom, paging, changing base unit settings, etc.)
☎	Handset is on an outside call.
✕	Call bar is on. (page 21)
▮▮▮	Battery strength
[VE]	Voice enhancer is set to high or low tone. (page 12)
[N]	Night mode is on. (page 19)
[X]	Key lock is on. (page 12)
[2]	Handset number: The left icon shows handset 2 example. (page 20)
-2-	Base unit number: The left icon shows base unit 2 example. (page 20)
[IN USE]	Line is being used by another handset.

Connections

When the AC adaptor is connected, a short beep will be heard. If it is not heard, check the connections.

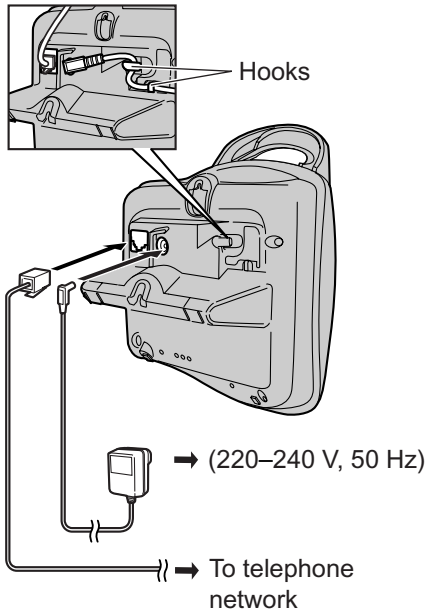

Important:

- Use only the AC adaptor and telephone line cord supplied with this unit.

Note:

- After connection, you must charge the batteries to make or answer calls (page 8).
- Never install telephone wiring during a lightning storm.
- The AC adaptor must remain connected at all times. (It is normal for the adaptor to feel warm during use.)
- The AC adaptor should be connected to a vertically oriented or floor-mounted AC outlet. Do not connect the AC adaptor to a ceiling-mounted AC outlet, as the weight of the adaptor may cause it to become disconnected.

TCD200FX(e-e).book Page 8 Monday, February 7, 2005 1:19 PM

Battery installation

1 Insert the batteries negative (⊖) terminal first.

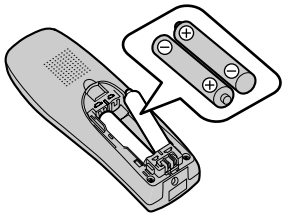

2 Close the handset cover.

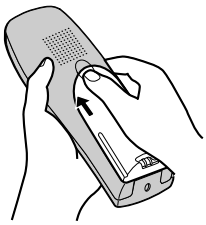

Note:

- Use only rechargeable batteries (page 4).

Battery charge

Place the handset on the base unit for about 7 hours before initial use.
When charging, the battery icon is shown as follows.

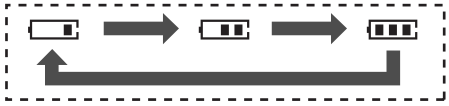

When the batteries are fully charged, [▮▮▮] remains on the display.

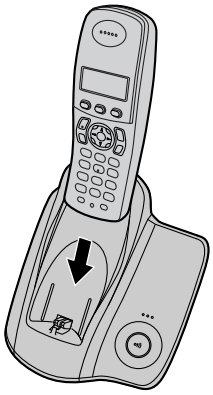

Note:

- It is normal for the handset to feel warm during charging.
- It takes 7 hours to fully charge the batteries, however, you can use the handset before the batteries are fully charged.
- Clean the charge contacts (page 6) of the handset and base unit with a soft, dry cloth once a month, otherwise the batteries may not charge properly. Clean more often if the unit is exposed to grease, dust or high humidity.

Battery strength

Battery icon	Battery strength
[▮▮▮]	High
[▮▮]	Medium
[▮]	Low When flashing: Needs to be charged.

Note:

- When [▮] flashes, recharge the handset batteries. [▮] will continue to flash until the batteries have been charged for at least 15 minutes.

TCD200FX(e-e).book Page 9 Monday, February 7, 2005 1:19 PM

- If the handset is turned off, it will be turned on automatically when it is placed on the base unit.

Battery life

After your Panasonic batteries are fully charged, you can expect the following performance:

Ni-MH batteries (700 mAh)

Operation	Operating time
While in use (talking)	20 hours max.
While not in use (standby)	170 hours max.

Note:

- Actual battery performance depends on a combination of how often the handset is in use (talking) and how often it is not in use (standby).
- Battery operating time may be shortened over time depending on usage conditions and ambient temperature.

Battery replacement

If flashes even after the handset batteries have been charged for 7 hours, the batteries must be replaced.

Important:

- We recommend the use of Panasonic rechargeable batteries noted on page 4. If you install non-rechargeable batteries and start charging, the batteries may leak electrolyte.
- Do not mix old and new batteries.

1 Press the notch on the handset cover firmly and slide it in the direction of the arrow.

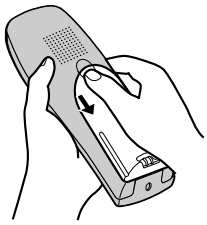

2 Remove the old batteries positive (⊕) terminal first and install the new ones. See page 8 for battery installation.

Turning the power on/off

Power on

Press 【 】 for about 1 second.

- The display will change to the standby mode.

Power off

Press 【 】 for about 2 seconds.

- The display will go blank.

Display language

16 display languages are available (page 20).

You can select “**Deutsch**”, “**English**”, “**Magyar**”, “**Polski**”, “**slovensky**”, “**ČeŠtina**”, “**Hrvatski**”, “**Slovenscina**”, “**Eesti**”, “**LIETUVIŠKAI**”, “**LatvieŠu**”, “**Română**”, “**БЪЛГАРСКИ**”, “**Srpski**”, “**МАКЕДОНСКИ**”, or “**Shqiptar**”.

TCD200FX(e-e).book Page 10 Monday, February 7, 2005 1:19 PM

Setting dialling mode (tone/pulse)

Change the dialling mode depending on your telephone line service.
"Tone": Select when you have a touch tone service.
"Pulse": Select when you have rotary or pulse service.

1 Press **[MENU/OK]**.

2 Select **"Base Unit Setup"**, then press **[▶]**.

3 Enter **"0000"** (default base unit PIN).
- If you changed the PIN, enter it (page 26).

4 Select **"Call Options"**, then press **[▶]**.

5 Select **"Dial Mode"**, then press **[▶]**.

6 Select the desired setting, then press **[▶]**.

7 Press **[OFF/CLEAR]**.

Setting the date and time

Important:
- Confirm that the AC adaptor is connected.
- Ensure that the antenna icon is not flashing.

1 Press **[MENU/OK]**.

2 Select **"Handset Setup"**, then press **[▶]**.

3 Select **"Time Settings"**, then press **[▶]**.

4 Select **"Set Date & Time"**, then press **[▶]**.

5 Enter the current day, month and year by selecting 2 digits for each.
Example: 17 May, 2005
Press **[1][7] [0][5] [0][5]**.

6 Enter the current hour and minute by selecting 2 digits for each.
- You can select **"AM"**, **"PM"** or 24-hour time entry by pressing **[✳]** repeatedly.

Example: 3:30 PM
Press **[0][3] [3][0]**, then press **[✳]** repeatedly until **"03:30 PM"** is displayed.

7 Press **[MENU/OK]**.

8 Press **[OFF/CLEAR]**.

Note:
- To correct a digit, press **[◀]** or **[▶]** to move the cursor, then make the correction.
- The date and time may be incorrect after a power failure. In this case, set the date and time again.

TCD200FX(e-e).book Page 11 Monday, February 7, 2005 1:19 PM

Making calls

1 Lift the handset and dial the phone number.
- To correct a digit, press **【C/⊠】**, then enter the correct number.

2 Press **【📞】**.

3 When finished talking, press **【📴】** or place the handset on the base unit.

Speakerphone

The handset features a digital speakerphone, which allows you to have hands-free conversations.

1 During a conversation, press **【🔊】** to turn on the speakerphone.
- Speak alternately with the caller.

2 When finished talking, press **【📴】** or place the handset on the base unit.

Note:

- For best performance, please note the following:
  - Use the speakerphone in a quiet environment.
  - If you or the other party have difficulty hearing each other, press **【▲】** or **【▼】** repeatedly to adjust the speaker volume as necessary.
- To switch back to the receiver, press **【📞】**.

To adjust the receiver or speaker volume

Press **【▲】** or **【▼】** while talking. 4 volume levels are available for the receiver. 6 levels are available for the speaker.

Redial feature

Previously dialled phone numbers (each 24 digits max.) can be redialled.

To redial the last number dialled

Press **【↻】**, then press **【📞】** or **【🔊】**.

Note:

- You can also press **【📞】** or **【🔊】** before pressing **【↻】**.

To make a call using the redial list

The last 10 phone numbers dialled are stored in the redial list.

1 Press **【↻】**.
- The last number dialled will be displayed.

2 Press **【▲】** or **【▼】** repeatedly to select the desired number.
- To exit the list, press **【📴】**.

3 Press **【📞】** or **【🔊】**.

To edit a number in the redial list before calling it

1 Press **【↻】**.

2 Press **【▲】** or **【▼】** repeatedly to select the desired number, then press **【☰/OK】**.

3 Select **"Edit and Call"**, then press **【▶】**.

4 Press **【◀】** or **【▶】** to move the cursor, then edit the number.
- Place the cursor on the number you wish to erase, then press **【C/⊠】**.
- Place the cursor to the right of where you want to insert a number, then press the appropriate dial key.

5 Press **【📞】** or **【🔊】**.

To erase numbers in the redial list

1 Press **【↻】**.

2 Press **【▲】** or **【▼】** repeatedly to select the desired number, then press **【☰/OK】**.

3 Select **"Erase"**, then press **【▶】**.
- If you want to erase all numbers in the list, select **"Erase All"**, then press **【▶】**.

TCD200FX(e-e).book Page 12 Monday, February 7, 2005 1:19 PM

4 Select "**Yes**", then press 【▶】.

5 Press 【⚒⏻】.

To store a number from the redial list into the phonebook

1 Press 【○●】.

2 Press 【▲】 or 【▼】 repeatedly to select the desired number, then press 【☰/OK】.

3 Select "**Add Phonebook**", then press 【▶】.

4 Enter a name (16 characters max.; see page 35 for character entry), then press 【☰/OK】.

5 Edit the phone number if necessary, then press 【☰/OK】.

6 Select the desired category (page 14), then press 【▶】.

7 Select "**Save**", then press 【▶】.

8 Press 【⚒⏻】.

Other features

Voice enhancer

You can change the tone quality of the receiver while you are on a call. 3 settings are available.

1 Press 【☰/OK】 during a call.

2 Select the desired setting, then press 【▶】.

Note:

- If you select "**High Tone**" or "**Low Tone**", "**[VE]**" is displayed.

Mute

You can mute your voice during a conversation. While mute is turned on, you will be able to hear the other party, but the other party will not be able to hear you.

1 To mute your voice, press 【C/⊠】.

2 To return to the conversation, press 【C/⊠】 again.

Key lock

The handset can be locked so that no calls or settings can be made. Incoming calls can be answered, but all other functions are disabled while key lock is on.

To turn key lock on, press 【☰/OK】 for about 2 seconds.

- "**[X]**" is displayed.
- To turn key lock off, press 【☰/OK】 for about 2 seconds.

Note:

- Calls to emergency numbers (page 25) cannot be made until key lock is turned off.
- Key lock is turned off when the handset is turned off.

R button (to use the recall feature)

【R】 is used to access optional telephone services. Contact your service provider for details.

Note:

- If your unit is connected to a PBX (private branch exchange), pressing 【R】 can allow you to access certain features of your host PBX such as transferring an extension call. Consult your PBX dealer for details.
- You can change the recall time (page 25).

Pause button (for PBX/long distance service users)

A pause is sometimes required when making calls using a PBX or long distance service.

Example: If you have to dial 【0】 before dialling outside numbers manually, you will probably pause after dialling 【0】 until you hear a dial tone.

1 Press 【0】.

2 Press 【○●】.

TCD200FX(e-e).book Page 13 Monday, February 7, 2005 1:19 PM

3 Dial the phone number, then press 【📞】 or 【🔊】.

Note:

- Pressing 【↻●】 1 time creates 1 pause. Press 【↻●】 repeatedly to create longer pauses. To change pause length, see page 25.

Temporary tone dialling (for rotary or pulse service users)

You can temporarily switch the dialling mode to tone when you need to access touch tone services (e.g., telephone banking services).

1 Make a call.

2 Press 【✳】 when prompted to enter your code or PIN, then press the appropriate dial keys.

Note:

- The dialling mode will return to pulse when you hang up.

Answering calls

1 Lift the handset and press 【📞】 or 【🔊】 when the unit rings.

- You can also answer a call by pressing any dial key from **【0】** to **【9】**, 【✳】, **【#】**, or **【INT】**. **(Any key answer feature)**

2 When finished talking, press 【📞⏻】 or place the handset on the base unit.

Auto talk feature

You can answer calls simply by lifting the handset off the base unit. You do not need to press 【📞】. To turn this feature on, see page 21.

To adjust the ringer volume when an outside call comes in

Press 【▲】 or 【▼】 when an outside call comes in.

Note:

- The ringer volume cannot be adjusted if the handset is on the base unit.

Other features

Handset locator

Using this feature, you can locate the handset if it has been misplaced.

1 Press 【📡】 on the base unit.

- The base unit will page the handset for about 1 minute.

2 To stop paging, press 【📡】 on the base unit or press 【📞⏻】 on the handset.

TCD200FX(e-e).book Page 14 Monday, February 7, 2005 1:19 PM

Using the phonebook

The phonebook allows you to make calls without having to dial manually. You can add 20 names and phone numbers to the phonebook, assign each phonebook entry to the desired category, and search for phonebook entries by name or category.

Adding entries to the phonebook

1 Press 【📖】, then press 【☰/OK】.
2 Select **"New Entry"**, then press 【▶】.
3 Enter the party's name (16 characters max.; see page 35 for character entry), then press 【☰/OK】.
4 Enter the party's phone number (24 digits max.), then press 【☰/OK】.
5 Select the desired category for the entry, then press 【▶】.
6 Select **"Save"**, then press 【▶】.
7 Press 【⏻】.

Note:

- If there is no space to store new entries, **"Memory Full"** will be displayed. Erase unnecessary entries (page 15).

To edit/correct a mistake

Press 【◀】 or 【▶】 to place the cursor on the number or character you wish to erase, then press 【C/⌫】. Place the cursor to the right of where you want to insert a number or character, then press the appropriate dial key.

Note:

- Press and hold 【C/⌫】 to erase all numbers or characters.

Categories

Categories can help you find entries in the phonebook quickly and easily. When adding an entry to the phonebook you can assign it to the desired category. You can change the names of categories assigned for phonebook entries ("Friends", "Family", etc.) and then search for phonebook entries by category. Additional category features are available for Caller ID subscribers (page 28).

Changing category names

1 Press 【📖】, then press 【☰/OK】.
2 Select **"Category"**, then press 【▶】.
3 Select the category you want to change the name of, then press 【▶】.
4 Select **"Category Name"**, then press 【▶】.
5 Edit the name (10 characters max.; see page 35 for character entry), then press 【☰/OK】.
6 Press 【⏻】.

Finding and calling a phonebook entry

Phonebook entries can be searched for by first character, by category, or by scrolling through all phonebook entries.
Once you have found the desired entry, press 【📞】 or 【🔊】 to dial the phone number.

Scrolling through all entries

1 Press 【📖】.
2 Press 【▲】 or 【▼】 repeatedly to display the desired entry.

Searching by first character (index search)

1 Press 【📖】, then press 【●】.
2 Select **"Index Search"**, then press 【▶】.
3 Select the character entry mode that contains the character you are searching for, and press 【▶】.

TCD200FX(e-e).book Page 15 Monday, February 7, 2005 1:19 PM

4 Press the dial key (【0】 to 【9】) which contains the character you are searching for (page 35).
- Press the same dial key repeatedly to display the first entry corresponding to each letter located on that dial key.
- If there is no entry corresponding to the letter you selected, the next entry will be displayed.

5 Press 【▲】 or 【▼】 repeatedly to scroll through the phonebook if necessary.

Searching by category

1 Press 【📖】, then press 【●】.
2 Select "**Category Search**", then press 【▶】.
3 Select the category you want to search, then press 【▶】.
- The first entry in that category is displayed.
- If you select "**All**", the unit will end the category search.

4 Press 【▲】 or 【▼】 repeatedly to scroll through the phonebook if necessary.

Editing entries in the phonebook

Phonebook entries can be edited after you have saved them. You can change the name, phone number, and category.

Changing a name, phone number, category

1 Find the desired entry (page 14), then press 【☰/OK】.
2 Select "**Edit**", then press 【▶】.
3 Edit the name if necessary (16 characters max.; see page 35 for character entry), then press 【☰/OK】.
4 Edit the phone number if necessary (24 digits max.), then press 【☰/OK】.
5 Select the desired category, then press 【▶】.
6 Select "**Save**", then press 【▶】.
7 Press 【⏻】.

Erasing entries from the phonebook

Erasing an entry

1 Find the desired entry (page 14), then press 【☰/OK】.
2 Select "**Erase**", then press 【▶】.
3 Select "**Yes**", then press 【▶】.
4 Press 【⏻】.

Erasing all entries

1 Press 【📖】, then press 【☰/OK】.
2 Select "**Erase All**", then press 【▶】.
3 Select "**Yes**", then press 【▶】.
4 Select "**Yes**" again, then press 【▶】.
5 Press 【⏻】.

One touch dial

Assigning an entry in the phonebook to a one touch dial key

Dial keys 【1】 to 【9】 can each be used as a one touch dial key, allowing you to dial a number from the phonebook by simply pressing a dial key.

1 Find the desired entry (page 14), then press 【☰/OK】.
2 Select "**One Touch Dial**", then press 【▶】.
3 Press 【▲】 or 【▼】 to select the desired dial key number, then press 【▶】.
- When the dial key is already used as a one touch dial key, "**∗**" is displayed next to the dial key number. If you select this dial key, "**Overwrite**" is displayed. You can overwrite the previous assignment if necessary.

TCD200FX(e-e).book Page 16 Monday, February 7, 2005 1:19 PM

- If you do not wish to overwrite, select **"Go Back"**.

4 Select **"Save"**, then press **[▶]**.

5 Press **[OFF]**.

Making a call using a one touch dial key

1 Press and hold the desired one touch dial key (**[1]** to **[9]**).
- You can view other one touch dial assignments by pressing **[▲]** or **[▼]**.

2 Press **[SP-PHONE]** or **[MUTE]**.

Erasing a one touch dial assignment

1 Press and hold the desired one touch dial key (**[1]** to **[9]**).

2 Press **[MENU/OK]**, then press **[▶]**.

3 Select **"Yes"**, then press **[▶]**.

Note:

- Only the one touch dial assignment is erased. The corresponding phonebook entry is not erased.

Chain dial

This feature allows you to dial phone numbers in the phonebook while you are on a call. This feature can be used, for example, to dial a calling card access number or bank account PIN that you have stored in the phonebook, without having to dial manually.

1 While on a call, press **[PHONEBOOK]**.

2 Press **[▲]** or **[▼]** repeatedly to select the desired entry.
- To search by first character (index search), see page 14. To search by category, see page 15.

3 Press **[▶]** to dial the number.

Copying phonebook entries to other handsets

Phonebook entries (page 14) can be copied from the handset to the phonebook of a compatible Panasonic handset.

Copying one entry

1 Find the desired entry (page 14), then press **[MENU/OK]**.

2 Select **"Copy"**, then press **[▶]**.

3 Enter the handset number you wish to send the phonebook entry to.

4 To continue copying another entry, select **"Yes"**, then press **[▶]**. Find the desired entry, then press **[▶]**.
- To finish copying, select **"No"**, then press **[▶]**.

5 Press **[OFF]**.

Copying all entries

1 Press **[PHONEBOOK]**, then press **[MENU/OK]**.

2 Select **"Copy All"**, then press **[▶]**.

3 Enter the handset number you wish to send the phonebook entries to.
- When all entries have been copied, **"Completed"** is displayed.

4 Press **[OFF]**.

Note:

- If the other handset (the receiver) is not in standby mode, **"Failed"** is displayed on your handset (the sender).
- If copying failed after copying at least 1 entry, **"Incomplete"** is displayed on your handset (the sender).

TCD200FX(e-e).book Page 17 Monday, February 7, 2005 1:19 PM

Guide to handset settings

For your reference, a chart of all items which can be customised for the handset is printed below.

- When customising the handset, the current item or setting is indicated by ▶.

Handset settings menu	Sub-menu	Sub-menu 2	Default setting	Page
Time Settings	Set Date & Time		—	page 10
	Alarm		Off	page 18
Ringer Setup	Ringer Volume		*Maximum*	page 18
	Ext. Ringtone		Ringtone 1	page 18
	Int. Ringtone		Ringtone 1	page 18
	Night Mode	Start/End	*23:00/06:00*	page 19
		On/Off	Off	page 19
		Ring Delay	60 sec.	page 19
		Select Category	—	page 20
Display Setup	Standby Display		Off	page 20
	Select Language		English	page 20
	Contrast		*Level 3*	page 20
Call Options	Call Bar		Off	page 21
	Auto Talk		Off	page 21
Registration	Register H.set		—	page 31
Select Base	—		Auto	page 31
Other Options	Handset PIN		0000	page 21
	Keytones		On	page 21
	Reset Handset		—	page 22

Note:

- Up to 3 menu items can be displayed at a time. To select a menu item not shown on the current page, scroll up or down by pressing the navigator key, 【▲】 or 【▼】, respectively.

TCD200FX(e-e).book Page 18 Monday, February 7, 2005 1:19 PM

Time settings

Alarm

An alarm will sound for 3 minutes at the set time once or daily. Set the date and time beforehand (page 10).

1 Press **[☰/OK]**.

2 Select **"Handset Setup"**, then press **[▶]**.

3 Select **"Time Settings"**, then press **[▶]**.

4 Select **"Alarm"**, then press **[▶]** 2 times.

5 Select an alarm mode, then press **[▶]**.
- **"Once"**: The alarm will sound once at the set time. Enter the desired day and month by selecting 2 digits for each.
- **"Daily"**: An alarm will sound daily at the set time.
- **"Off"**: Turns the alarm off. Press **[▶]** again, then press **[✂⏻]** to finish.

6 Enter the desired hour and minute by selecting 2 digits for each.
- You can select **"AM"**, **"PM"** or 24-hour time entry by pressing **[✳]** repeatedly.

7 Press **[☰/OK]**.

8 Select the ringtone that will sound at the set time, then press **[▶]**.

9 Select **"Save"**, then press **[▶]**.

10 Press **[✂⏻]**.

Note:
- To stop the alarm, press any dial key.
- When in talk or intercom mode, the alarm will not sound until the call has ended.
- The alarm will sound at the set time even when the ringer volume is turned off.
- If you select **"Once"**, the setting will change to **"Off"** after the alarm sounds.

Ringer setup

Ringer volume

1 Press **[☰/OK]**.

2 Select **"Handset Setup"**, then press **[▶]**.

3 Select **"Ringer Setup"**, then press **[▶]**.

4 Select **"Ringer Volume"**, then press **[▶]**.

5 Press **[▲]** or **[▼]** repeatedly to select the desired volume.

6 Press **[▶]**.

7 Press **[✂⏻]**.

Note:
- Alarms will sound and the handset will ring for intercom calls and when paged even if the ringer is turned off.

Changing ringtones

You can change the ringtone used by the handset.

"Ext. Ringtone": Selects the ringtone for outside calls.

"Int. Ringtone": Selects the ringtone for intercom calls.

1 Press **[☰/OK]**.

2 Select **"Handset Setup"**, then press **[▶]**.

3 Select **"Ringer Setup"**, then press **[▶]**.

4 Select the desired item, then press **[▶]**.

5 Select the desired ringtone, then press **[▶]**.

6 Press **[✂⏻]**.

Note:
- If you select one of the melody ringtones, the ringtone will continue to sound for several seconds if the caller hangs up

TCD200FX(e-e).book Page 19 Monday, February 7, 2005 1:19 PM

before you answer. You may hear a dial tone or no one on the line when you answer a call.

- The preset melodies in this product are used with permission of © 2004 M-ZoNE Co., Ltd.

Night mode

Night mode allows you to select a block of time during which the handset will not ring for outside calls. This feature is useful for times when you do not want to be disturbed, for example, while sleeping. Night mode can be set independently for the handset and the base unit (page 24).
Using the phonebook's category feature (page 14), you can also select categories of callers whose calls will override night mode and ring the handset (Caller ID subscribers only).
Set the date and time beforehand (page 10).

Setting the start and end time for night mode

1. Press 【☰/OK】.
2. Select "**Handset Setup**", then press 【▶】.
3. Select "**Ringer Setup**", then press 【▶】.
4. Select "**Night Mode**", then press 【▶】.
5. Select "**Start/End**", then press 【▶】.
6. Enter the desired hour and minute you wish to start this feature by selecting 2 digits for each.
   - If you use 12-hour time entry, select "**AM**" or "**PM**" by pressing 【✳】 repeatedly before entering the time.
7. Enter the desired hour and minute you wish to end this feature by selecting 2 digits for each.
   - If you use 12-hour time entry, select "**AM**" or "**PM**" by pressing 【✳】 repeatedly before entering the time.
8. Press 【☰/OK】.
9. Press 【⏻】.

Turning night mode on/off

1. Press 【☰/OK】.
2. Select "**Handset Setup**", then press 【▶】.
3. Select "**Ringer Setup**", then press 【▶】.
4. Select "**Night Mode**", then press 【▶】.
5. Select "**On/Off**", then press 【▶】.
6. Select "**On**" or "**Off**", then press 【▶】.
7. Press 【⏻】.

Note:

- When the night mode is turned on, "**[N]**" is displayed.

Setting the ring delay for night mode

This setting allows the handset to ring during night mode if the caller waits long enough. After the selected amount of time passes, the handset will ring, useful when someone urgently needs to speak with you. If you select "**No Ringing**", the handset will not ring during night mode.

1. Press 【☰/OK】.
2. Select "**Handset Setup**", then press 【▶】.
3. Select "**Ringer Setup**", then press 【▶】.
4. Select "**Night Mode**", then press 【▶】.
5. Select "**Ring Delay**", then press 【▶】.
6. Select the desired setting, then press 【▶】.
7. Press 【⏻】.

Selecting categories to bypass night mode

1 Press 【▤/OK】.
2 Select "`Handset Setup`", then press 【▶】.
3 Select "`Ringer Setup`", then press 【▶】.
4 Select "`Night Mode`", then press 【▶】.
5 Select "`Select Category`", then press 【▶】.
6 Press the desired category numbers, then press 【▤/OK】.
   - The selected category number will flash.
   - To cancel a selected category number, press the number again. The number will stop flashing.
7 Press 【✂⏻】.

Note:
- If a call is received from one of the categories set to bypass night mode, only the handset will ring.

Display setup

Selecting the standby mode display

"`Base Number`": The current base unit number is displayed.
"`Handset Number`": The current handset number is displayed.
"`Off`": Only the current date and time are displayed.

1 Press 【▤/OK】.
2 Select "`Handset Setup`", then press 【▶】.
3 Select "`Display Setup`", then press 【▶】.
4 Select "`Standby Display`", then press 【▶】.
5 Select the desired setting, then press 【▶】.
6 Press 【✂⏻】.

Note:
- If "`Base Number`" is selected and the current base unit number is 2, "`-2-`" is displayed.
- If "`Handset Number`" is selected and the current handset number is 2, "`[2]`" is displayed.

Changing the display language

1 Press 【▤/OK】.
2 Select "`Handset Setup`", then press 【▶】.
3 Select "`Display Setup`", then press 【▶】.
4 Select "`Select Language`", then press 【▶】.
5 Select the desired language, then press 【▶】.
6 Press 【✂⏻】.

Note:
- If you select a language you cannot read, press 【✂⏻】, 【▤/OK】, press 【▲】 2 times, press 【▶】, press 【▼】 2 times, press 【▶】, press 【▼】, press 【▶】, select the desired language, then press 【▶】. Press 【✂⏻】.

Changing the display contrast

1 Press 【▤/OK】.
2 Select "`Handset Setup`", then press 【▶】.
3 Select "`Display Setup`", then press 【▶】.
4 Select "`Contrast`", then press 【▶】.

TCD200FX(e-e).book Page 21 Monday, February 7, 2005 1:19 PM

5 Press {▲} or {▼} repeatedly to select the desired contrast, then press {▶}.

6 Press {⏻}.

Call options

Turning call bar on/off

This feature prohibits making outside calls. When call bar is turned on, only intercom calls and calls to emergency numbers (page 25) can be made.

1 Press {☰/OK}.

2 Select "**Handset Setup**", then press {▶}.

3 Select "**Call Options**", then press {▶}.

4 Select "**Call Bar**", then press {▶}.

5 Enter "**0000**" (default handset PIN).
- If you changed the PIN, enter it (page 21).

6 Select "**On**" or "**Off**", then press {▶}.

7 Press {⏻}.

Note:
- When call bar is turned on, is displayed.

Turning auto talk on/off

When this feature is turned on, you can answer calls simply by lifting the handset off the base unit. You do not need to press {📞}.

1 Press {☰/OK}.

2 Select "**Handset Setup**", then press {▶}.

3 Select "**Call Options**", then press {▶}.

4 Select "**Auto Talk**", then press {▶}.

5 Select "**On**" or "**Off**", then press {▶}.

6 Press {⏻}.

Other options

Changing the handset PIN (Personal Identification Number)

For security, the handset PIN must be entered when changing certain settings. The default PIN is "**0000**".

Important:
- If you change the PIN, please make note of your new PIN. The unit will not reveal the PIN to you. If you forget your PIN, consult your nearest Panasonic service centre.

1 Press {☰/OK}.

2 Select "**Handset Setup**", then press {▶}.

3 Select "**Other Options**", then press {▶}.

4 Select "**Handset PIN**", then press {▶}.

5 Enter the current 4-digit handset PIN.

6 Enter the new 4-digit handset PIN, then press {☰/OK}.

7 Press {⏻}.

Turning keytones on/off

Keytones are tones heard when keys are pressed. Includes confirmation tones and error tones.

1 Press {☰/OK}.

2 Select "**Handset Setup**", then press {▶}.

3 Select "**Other Options**", then press {▶}.

4 Select "**Keytones**", then press {▶}.

5 Select "**On**" or "**Off**", then press {▶}.

6 Press {⏻}.

TCD200FX(e-e).book Page 22 Monday, February 7, 2005 1:19 PM

Note:

- If keytones are turned off, error tones will not sound when you enter the wrong PIN or when memory is full.

Resetting the handset to its default settings

1 Press **[☰/OK]**.

2 Select **"Handset Setup"**, then press **[▶]**.

3 Select **"Other Options"**, then press **[▶]**.

4 Select **"Reset Handset"**, then press **[▶]**.

5 Enter **"0000"** (default handset PIN).

- If you changed the PIN, enter it (page 21).

6 Select **"Yes"**, then press **[▶]**.

7 Press **[OFF]**.

Note:

- The following items will be deleted or reset to their default settings:
  - Settings listed on page 17
  - Redial list
  - Voice enhancer
  - Category names
  - Category ringtones
- The following items will be retained:
  - Phonebook entries (category names and ringtones will be reset to their default settings.)
  - Date and time

TCD200FX(e-e).book Page 23 Monday, February 7, 2005 1:19 PM

Guide to base unit settings

For your reference, a chart of all items which can be customised for the base unit is printed below.

- When customising the base unit, the current item or setting is indicated by ▶.

Base unit settings menu	Sub-menu	Sub-menu 2	Default setting	Page
Ringer Setup	Ringer Volume		*Medium*	page 24
	Night Mode	Start/End	*23:00/06:00*	page 24
		On/Off	Off	page 24
		Ring Delay	60 sec.	page 24
Call Options	Dial Mode		Tone	page 10
	Recall		600 msec.	page 25
	Pause Length		3 sec.	page 25
	Emergency No.		—	page 25
	Call Restrict		—	page 25
Other Options	Base Unit PIN		0000	page 26
	Repeater Mode		Off	page 32
	Reset Base		—	page 26

Note:

- Up to 3 menu items can be displayed at a time. To select a menu item not shown on the current page, scroll up or down by pressing the navigator key, 【▲】 or 【▼】, respectively.

TCD200FX(e-e).book Page 24 Monday, February 7, 2005 1:19 PM

Ringer setup

Ringer volume

1 Press **[☰/OK]**.

2 Select **"Base Unit Setup"**, then press **[▶]**.

3 Enter **"0000"** (default base unit PIN).
- If you changed the PIN, enter it (page 26).

4 Select **"Ringer Setup"**, then press **[▶]**.

5 Select **"Ringer Volume"**, then press **[▶]**.

6 Press **[▲]** or **[▼]** repeatedly to select the desired volume.

7 Press **[▶]**.

8 Press **[⏻]**.

Night mode

Night mode allows you to select a block of time during which the base unit will not ring for outside calls. This feature is useful for times when you do not want to be disturbed, for example, while sleeping. Night mode can be set independently for the handset (page 19) and the base unit.
Set the date and time beforehand (page 10).

Setting the start and end time for night mode

1 Press **[☰/OK]**.

2 Select **"Base Unit Setup"**, then press **[▶]**.

3 Enter **"0000"** (default base unit PIN).
- If you changed the PIN, enter it (page 26).

4 Select **"Ringer Setup"**, then press **[▶]**.

5 Select **"Night Mode"**, then press **[▶]**.

6 Select **"Start/End"**, then press **[▶]**.

7 Enter the desired hour and minute you wish to start this feature by selecting 2 digits for each.
- If you use 12-hour time entry, select **"AM"** or **"PM"** by pressing **[✳]** repeatedly before entering the time.

8 Enter the desired hour and minute you wish to end this feature by selecting 2 digits for each.
- If you use 12-hour time entry, select **"AM"** or **"PM"** by pressing **[✳]** repeatedly before entering the time.

9 Press **[☰/OK]**.

10 Press **[⏻]**.

Turning night mode on/off

1 Press **[☰/OK]**.

2 Select **"Base Unit Setup"**, then press **[▶]**.

3 Enter **"0000"** (default base unit PIN).
- If you changed the PIN, enter it (page 26).

4 Select **"Ringer Setup"**, then press **[▶]**.

5 Select **"Night Mode"**, then press **[▶]**.

6 Select **"On/Off"**, then press **[▶]**.

7 Select **"On"** or **"Off"**, then press **[▶]**.

8 Press **[⏻]**.

Setting the ring delay for night mode

This setting allows the base unit to ring during night mode if the caller waits long enough. After the selected amount of time passes, the base unit will ring, useful when someone urgently needs to speak with you. If you select **"No Ringing"**, the base unit will not ring during night mode.

1 Press **[☰/OK]**.

2 Select **"Base Unit Setup"**, then press **[▶]**.

TCD200FX(e-e).book Page 25 Monday, February 7, 2005 1:19 PM

3 Enter “0000” (default base unit PIN).
- If you changed the PIN, enter it (page 26).

4 Select “Ringer Setup”, then press [▶].

5 Select “Night Mode”, then press [▶].

6 Select “Ring Delay”, then press [▶].

7 Select the desired setting, then press [▶].

8 Press [☎⏻].

Call options

Changing the recall time

Change the recall time, if necessary, depending on the requirements of your service provider or PBX.

1 Press [☰/OK].

2 Select “Base Unit Setup”, then press [▶].

3 Enter “0000” (default base unit PIN).
- If you changed the PIN, enter it (page 26).

4 Select “Call Options”, then press [▶].

5 Select “Recall”, then press [▶].

6 Select the desired setting, then press [▶].

7 Press [☎⏻].

Setting pause length

Change the pause length, if necessary, depending on the requirements of your service provider or PBX.

1 Press [☰/OK].

2 Select “Base Unit Setup”, then press [▶].

3 Enter “0000” (default base unit PIN).
- If you changed the PIN, enter it (page 26).

4 Select “Call Options”, then press [▶].

5 Select “Pause Length”, then press [▶].

6 Select the desired setting, then press [▶].

7 Press [☎⏻].

Storing/changing emergency numbers

These settings determine which phone numbers can be dialled while the call bar feature is on (page 21).

1 Press [☰/OK].

2 Select “Base Unit Setup”, then press [▶].

3 Enter “0000” (default base unit PIN).
- If you changed the PIN, enter it (page 26).

4 Select “Call Options”, then press [▶].

5 Select “Emergency No.”, then press [▶].

6 Select a memory location, then press [▶].
- If the memory location already contains an emergency number, the number is displayed.

7 Enter/edit the number, then press [☰/OK].
- To erase an emergency number, press and hold [C/⌫].

8 Press [☎⏻].

Setting call restriction

You can restrict selected handsets from dialling certain numbers. You can assign up to 6 phone numbers to be restricted, and select which handsets will be restricted.

TCD200FX(e-e).book Page 26 Monday, February 7, 2005 1:19 PM

Storing area codes here will prevent the restricted handsets from dialling any phone number in that area code. If a restricted number is dialled, the call will not be connected and the restricted number will flash on the display.

1 Press **【▤/OK】**.

2 Select **"Base Unit Setup"**, then press **【▶】**.

3 Enter **"0000"** (default base unit PIN).
- If you changed the PIN, enter it (page 26).

4 Select **"Call Options"**, then press **【▶】**.

5 Select **"Call Restrict"**, then press **【▶】**.

6 Set which handsets will be restricted by pressing the desired handset number.
- All the registered handset numbers will be displayed.
- Flashing numbers indicate call restriction is turned on for the corresponding handset.
- To turn call restriction off for a handset, press the number again. The number will stop flashing.

7 Press **【▤/OK】**.

8 Select a memory location, then press **【▶】**.
- If the memory location already contains a restricted number, the number is displayed.

9 Enter the phone number or area code to be restricted (8 digits max.), then press **【▤/OK】**.
- To erase a restricted number, press **【C/⊠】**.

10 Press **【✆⏻】**.

Other options

Changing the base unit PIN (Personal Identification Number)

For security, the base unit PIN must be entered when changing certain settings. The default PIN is **"0000"**.

Important:
- If you change the PIN, please make note of your new PIN. The unit will not reveal the PIN to you. If you forget your PIN, consult your nearest Panasonic service centre.

1 Press **【▤/OK】**.

2 Select **"Base Unit Setup"**, then press **【▶】**.

3 Enter **"0000"** (default base unit PIN).
- If you changed the PIN, enter it.

4 Select **"Other Options"**, then press **【▶】**.

5 Select **"Base Unit PIN"**, then press **【▶】**.

6 Enter the new 4-digit base unit PIN, then press **【▤/OK】**.

7 Press **【✆⏻】**.

Resetting the base unit to its default settings

1 Press **【▤/OK】**.

2 Select **"Base Unit Setup"**, then press **【▶】**.

3 Enter **"0000"** (default base unit PIN).
- If you changed the PIN, enter it (page 26).

4 Select **"Other Options"**, then press **【▶】**.

5 Select **"Reset Base"**, then press **【▶】**.

6 Select **"Yes"**, then press **【▶】**.

TCD200FX(e-e).book Page 27 Monday, February 7, 2005 1:19 PM

7 Press 【✂⊙】.

Note:

- The following items will be deleted or reset to their default settings:
  - Settings listed on page 23
  - Caller list
- The following items will be retained:
  - Date and time
  - Repeater mode

TCD200FX(e-e).book Page 28 Monday, February 7, 2005 1:19 PM

Using Caller ID service

Important:

- This unit is Caller ID compatible. To use Caller ID features (such as displaying caller phone numbers), you must subscribe to Caller ID service. Consult your service provider for details.

Caller ID features

When an outside call is received, the caller's phone number can be displayed.

- Phone numbers of the last 50 different callers will be logged in the caller list.
- When caller information is received and it matches a phone number stored in the unit's phonebook:
  - The stored name will be displayed and logged in the caller list.
  - The handset will use the ringtone assigned to the caller's category.
- If the unit is connected to a PBX system, you may not receive the caller information.
- When the caller dialled from an area which does not provide Caller ID service, **"Out of Area"** will be displayed.
- When the caller requested not to send caller information, either no information or **"Private Caller"** will be displayed.

Missed calls

If a call is not answered, the unit treats the call as a missed call. The number of missed calls is shown on the display. This lets you know if you should view the caller list to see who called while you were out.

Category features for Caller ID subscribers

Categories can help you identify who is calling by using different ringtones for different categories of callers. When adding an entry to the phonebook you can assign it to the desired category (page 14). When a call is received from a caller assigned to a category, the category's ringtone you select is used.

Changing category ringtones

You can select a ringtone for each category. If you select **"Ext. Ringtone"**, the unit will use the external ringtone you set on page 18 when calls from this category are received. The default setting is **"Ext. Ringtone"**.

1. Press **【📖】**, then press **【☰/OK】**.
2. Select **"Category"**, then press **【▶】**.
3. Select a category, then press **【▶】**.
4. Select the current setting of the category ringtone, then press **【▶】**.
5. Select the desired ringtone, then press **【▶】**.
6. Press **【✆⏻】**.

Caller list

Viewing the caller list and calling back

Phone numbers of the last 50 different callers will be logged in the caller list. When the 51st call is received, the oldest caller information will be automatically erased. You can use this list to return missed calls.

1. Press **【☰/OK】**.
2. Select **"Caller List"**, then press **【▶】**.
   - The most recent call is displayed.
3. Press **【▼】** repeatedly to search from the most recent call, or press **【▲】** repeatedly to search from the oldest call.
   - If the item has already been viewed or answered, "✓" is displayed, even if it was viewed or answered using another handset.

TCD200FX(e-e).book Page 29 Monday, February 7, 2005 1:19 PM

4 Press **[ ]** or **[ ]** to call back the displayed party.

Editing a caller's phone number before calling back

1 Press **[/OK]**.

2 Select **"Caller List"**, then press **[ ]**.

3 Press **[ ]** or **[ ]** repeatedly to display the desired entry.

4 **To add a number**
Press the dial key (**[0]** to **[9]**).

- The number you pressed is added to the top of the current number.

To erase a number
Press **[/OK]**, select **"Edit and Call"**, then press **[ ]**.
Press **[ ]** or **[ ]** to place the cursor on the number you wish to erase, then press **[C/]**.

5 Press **[ ]** or **[ ]**.

Erasing caller information

1 Press **[/OK]**.

2 Select **"Caller List"**, then press **[ ]**.

3 Press **[ ]** or **[ ]** repeatedly to display the desired entry, then press **[/OK]**.

4 Select **"Erase"**, then press **[ ]**.

- To erase all entries, select **"Erase All"**, then press **[ ]**.

5 Select **"Yes"**, then press **[ ]**.

6 Press **[ ]**.

Storing caller information into the phonebook

1 Press **[/OK]**.

2 Select **"Caller List"**, then press **[ ]**.

3 Press **[ ]** or **[ ]** repeatedly to display the desired entry, then press **[/OK]**.

4 Select **"Add Phonebook"**, then press **[ ]**.

5 Continue from step 3, "Adding entries to the phonebook", page 14.

TCD200FX(e-e).book Page 30 Monday, February 7, 2005 1:19 PM

Operating additional units

Additional handsets

Up to 6 handsets can be registered to a single base unit. Additional handsets will give you the freedom to, for example, have an intercom call with another handset while a third handset is on an outside call. See page 4 for information on ordering additional handsets.

Important:

- The additional handset model recommended for use with this unit is noted on page 4. If other model handset is used, certain operations (handset settings, base unit settings, etc.) may not be available.

Additional base units

Handsets can be registered to up to 4 base units, allowing you to add additional base units and extend the area in which your handset(s) can be used. If a handset moves out of range of its base unit when **"Auto"** is selected on base unit selection (page 31), it will look for another base unit to make or receive calls. A base unit and the handsets it communicates with is called a "radio cell".

Note:

- Calls will be disconnected when the handset moves from one radio cell to another.
- Intercom calls and call transfers are only possible between handsets in the same radio cell.

Registering a handset to a base unit

To register an additional handset to a base unit (easy registration)

The included handset and base unit are preregistered. After purchasing an additional handset, register it to the base unit. Ensure that the additional handset is switched on. If it is not on, press and hold 【OFF】 for few seconds to turn the handset on.

1. Lift the additional handset and press 【OFF】 to put the handset in standby mode.
2. Press and hold 【(•))】 on the base unit for about 3 seconds, until the registration tone sounds.
3. Place the additional handset on the base unit. The registration tone continues to sound. With the handset still on the base unit, wait until a confirmation tone sounds and Y stops flashing.

Note:

- If an error tone sounds, or if Y is still flashing, register the handset manually (manual registration; page 31).
- If all registered handsets start ringing in step 2, press 【(•))】 to stop. Start again from step 1.
- Charge the batteries of your additional handset for about 7 hours before initial use.
- This registration method cannot be used for handsets that have already been registered to a base unit. Register the handset manually (manual registration; page 31).

To register a handset to an additional base unit (manual registration)

You can register a handset to a base unit manually using the following method.

1 Press 【▤/OK】.
2 Select "**Handset Setup**", then press 【▶】.
3 Select "**Registration**", then press 【▶】 2 times.
4 Select a base unit number, then press 【▶】.
   - This number is used by the handset as a reference only.
5 Press and hold 【•))) 】 on the base unit for about 3 seconds, until the registration tone sounds.
   - If all registered handsets start ringing, press 【•))) 】 to stop, then repeat this step.
   - After pressing 【•))) 】, the rest of this procedure must be completed within 1 minute.
6 Wait until "**Enter Base PIN**" is displayed, then enter "**0000**" (default base unit PIN), then press 【▤/OK】.
   - If you changed the PIN, enter it (page 26).
   - When the handset has been registered successfully, Ψ will stop flashing. If keytones are turned on (page 21), a confirmation tone will be heard.

Selecting a base unit

When "**Auto**" is selected, the handset will automatically use any available base unit it is registered to. When a specific base unit is selected, the handset will make and receive calls using that base unit only. If the handset is out of range of that base unit, no calls can be made.

1 Press 【▤/OK】.
2 Select "**Handset Setup**", then press 【▶】.
3 Select "**Select Base**", then press 【▶】.
4 Select the desired base unit number, or "**Auto**", then press 【▶】.
   - The handset starts searching for the base unit.

Cancelling a handset

A maximum of 6 handsets can be registered to a base unit. A handset can cancel its own registration (or the registration of another handset) that is stored in the base unit. This will allow the base unit to "forget" the handset.

1 Press 【▤/OK】.
2 Select "**Base Unit Setup**", then press 【▶】.
3 Enter "**0000**" (default base unit PIN).
   - If you changed the PIN, enter it (page 26).
4 Enter "**335**".
5 Select "**Cancel Handset**", then press 【▶】.
   - The numbers of all handsets registered to the base unit are displayed.
6 Select the handset(s) you want to cancel, by pressing the desired handset number.
   - The selected handset number(s) will flash.
   - To cancel a selected handset number, press the number again. The number will stop flashing.
7 Press 【▤/OK】.
8 Select "**Yes**", then press 【▶】.
9 Press 【✂⏻】.

TCD200FX(e-e).book Page 32 Monday, February 7, 2005 1:19 PM

Cancelling a base unit

A handset can be registered to a maximum of 4 base units. A handset can cancel a base unit that it is registered to. This allows the handset to “forget” the base unit.

1 Press 【▤/OK】.
2 Select “**Handset Setup**”, then press 【▶】.
3 Select “**Registration**”, then press 【▶】.
4 Enter “**335**”.
5 Select “**Cancel Base**”, then press 【▶】.
6 Enter “**0000**” (default handset PIN).
- If you changed the PIN, enter it (page 21).

7 Select the base unit(s) you want to cancel, by pressing the desired base unit number.
- The selected base unit number(s) will flash.
- To cancel a selected base unit number, press the number again. The number will stop flashing.

8 Press 【▤/OK】.
9 Select “**Yes**”, then press 【▶】.
10 Press 【☎⏻】.

Note:

- To register the handset to another base unit or to the same base unit again, see manual registration (page 31).

Increasing the range of the base unit

You can increase the range of the base unit by using a DECT repeater. Please use only the Panasonic DECT repeater noted on page 4. Consult your Panasonic dealer for details.

Important:

- Before registering the repeater to this base unit, you must turn the repeater mode on.

Turning the repeater mode on/off

1 Press 【▤/OK】.
2 Select “**Base Unit Setup**”, then press 【▶】.
3 Enter “**0000**” (default base unit PIN).
- If you changed the PIN, enter it (page 26).

4 Select “**Other Options**”, then press 【▶】.
5 Select “**Repeater Mode**”, then press 【▶】.
6 Select “**On**” or “**Off**”, then press 【▶】.
7 Press 【☎⏻】.

Note:

- After turning repeater mode on/off, you will not be able to make or receive calls for a few moments.

Intercom between handsets

Intercom calls can be made between handsets in the same radio cell, but not between handsets in different radio cells.
Example: When handset 1 calls handset 2

1 **Handset 1:**
Press 【INT】 and 【2】 (desired handset number).
2 **Handset 2:**
Press 【☎】 or 【🔊】 to answer.
3 When finished talking, press 【☎⏻】.

TCD200FX(e-e).book Page 33 Monday, February 7, 2005 1:19 PM

Transferring calls between handsets

Outside calls can be transferred between 2 handsets in the same radio cell.
Example: When handset 1 transfers a call to handset 2

1 **Handset 1:**
During an outside call, press **【INT】** and **【2】** (desired handset number).
- The outside call will be put on hold.
- If there is no answer, press **【INT】** to return to the outside call.

2 **Handset 2:**
Press **【】** or **【】** to answer the page.
- Handset 2 can talk with handset 1.

3 **Handset 1:**
To complete the call transfer, press **【】**.

Transferring a call without speaking to the other handset user

1 During an outside call, press **【INT】**, then press the desired handset number.
- The other handset rings if it is within range of the base unit and turned on.

2 Press **【】**.
- The outside call rings at the other handset.

Note:
- flashes to indicate the outside call is on hold.
- If the other handset user does not answer the call within 1 minute, the call will ring at your handset again.

Wall mounting

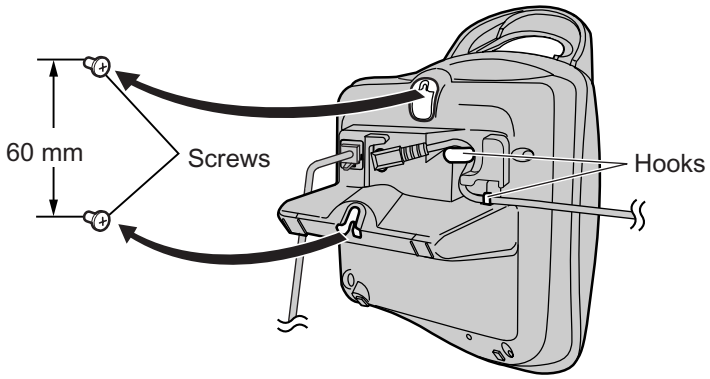

Note:

- Make sure the screws are securely fastened to the wall.
- Do not pinch the telephone line cord and AC adaptor cord between the base unit and the wall.
- Use the following wall template to position the screws before drilling.

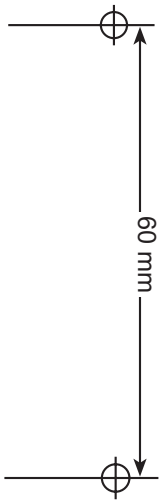

TCD200FX(e-e).book Page 35 Monday, February 7, 2005 1:19 PM

Available character entries

The dial keys are used to enter characters and numbers. Each dial key has multiple characters assigned to it. The available character entry modes are, Alphabet, Numeric, Greek, Extended 1, Extended 2, and Cyrillic. When in Alphabet (ABC), Greek (ΑΒΓ), Extended 1 (AÄÅ), Extended 2 (SŚŠ), or Cyrillic (АБВ) character entry modes, you can select which character is entered by pressing a dial key repeatedly.

- When the unit displays the character entry screen:
  - Press **【◀】** or **【▶】** to move the cursor.
  - Press dial keys to enter characters and numbers.
  - Press **【C/⊠】** to erase the character or number highlighted by the cursor. Press and hold **【C/⊠】** to erase all characters or numbers.
  - Press **【✳】** to switch between uppercase and lowercase.
  - To enter another character located on the same dial key, press **【▶】** to move the cursor to the next space, then press the appropriate dial key.

Character entry modes

Several character entry modes are available. When the unit displays the character entry screen, press **【📖】**, then select a character entry mode, and press **【▶】**. The default mode is Alphabet.

Alphabet character table (ABC)

0	1	ABC 2	DEF 3	GHI 4	JKL 5	MNO 6	PQRS 7	TUV 8	WXYZ 9
Space 0	Space # & ' ( ) ✳ , - . / 1	A B C 2 a b c 2	D E F 3 d e f 3	G H I 4 g h i 4	J K L 5 j k l 5	M N O 6 m n o 6	P Q R S 7 p q r s 7	T U V 8 t u v 8	W X Y Z 9 w x y z 9

Numeric entry table (0-9)

0	1	ABC 2	DEF 3	GHI 4	JKL 5	MNO 6	PQRS 7	TUV 8	WXYZ 9
0	1	2	3	4	5	6	7	8	9

Greek character table (ΑΒΓ)

0	1	ABC 2	DEF 3	GHI 4	JKL 5	MNO 6	PQRS 7	TUV 8	WXYZ 9
Space 0	Space # & ' ( ) ✳ , - . / 1	A B Γ 2	Δ E Z 3	H Θ I 4	K Λ M 5	N Ξ O 6	Π P Σ 7	T Y Φ 8	X Ψ Ω ϑ 9

Useful Information

Extended 1 character table (AÄÅ)

0	1	ABC 2	DEF 3	GHI 4	JKL 5	MNO 6	PQRS 7	TUV 8	WXYZ 9
Space 0	Space # & ' ( ) ∗ , - . / 1	A À Á Â Ã Ä Å Æ B Ē F 3 C Ç 2	D E È É Ê Ë	G Ğ H I Ì Í Î Ï Ī İ Ǐ 4	J K L 5	M N Ñ O Ò Ó Ô Õ Ö ø 6	P Q R S Ş ß 7	T U Ù Ú Û Ü Ũ V 8	W Ŵ X Y ŷ Z 9
		a à á â ã ä å æ b c ç 2	d e è é ê ë ē f 3	g ğ h i ì í î ï ī ı ǐ 4	j k l 5	m n ñ o ò ó ô õ ö ø 6	p q r s Ş ß 7	t u ù ú û ü ũ v 8	w Ŵ x y ŷ z 9

- The following are used for both uppercase and lowercase:

  ø Ş Ŵ ŷ

Extended 2 character table (SŚŠ)

0	1	ABC 2	DEF 3	GHI 4	JKL 5	MNO 6	PQRS 7	TUV 8	WXYZ 9
Space 0	Space # & ' ( ) ∗ , - . / 1	A Á Ä Ą B C Ć Č 2	D Ď E É Ę Ě F 3	G H I Í 4	J K L Ł Ĺ Ľ 5	M N Ń Ň O Ó Ö Ő 6	P Q R Ŕ Ř S Ś Š 7	T Ť U Ú Ü Ű ů V 8	W X Y ỳ Ý Z Ź Ż Ž 9
		a á ä Ą b c Ć Č 2	d ď e é Ę ě f 3	g h i í 4	j k l Ł Ĺ Ľ 5	m n Ń ň o ó ö ő 6	p q r Ŕ ř s Ś Š 7	t ť u ú ü ű ů v 8	w x y ỳ ý z Ź Ż Ž 9

- The following are used for both uppercase and lowercase:

  Ą Ć Č Ę Ł Ĺ Ľ Ń Ŕ Ś Š ů ỳ Ź Ż Ž

Cyrillic character table (АБВ)

0	1	ABC 2	DEF 3	GHI 4	JKL 5	MNO 6	PQRS 7	TUV 8	WXYZ 9
Space 0 Ґ Є I Ї Ў	Space # & ' ( ) ∗ , - . / 1	А Б В Г 2	Д Е Ж З 3	И Й К Л 4	М Н О П 5	Р С Т У 6	Ф Х Ц Ч 7	Ш Щ Ъ Ы 8	Ь Э Ю Я 9

TCD200FX(e-e).book Page 37 Monday, February 7, 2005 1:19 PM

Troubleshooting

If you still have difficulties after following the instructions in this section, disconnect the AC adaptor and turn off the handset, then reconnect the AC adaptor and turn on the handset.

Initial settings

Problem	Cause & solution
Y is flashing.	● The handset is not registered to the base unit. Register it (page 30). ● The handset is too far from the base unit. Move closer. ● The AC adaptor is not connected. Check the connections.
The handset display is blank.	● The handset is not turned on. Turn the power on (page 9).
The handset will not turn on.	● Make sure that the batteries are installed correctly (page 8). ● Fully charge the batteries (page 8). ● Clean the charge contact and charge again (page 8).

TCD200FX(e-e).book Page 38 Monday, February 7, 2005 1:19 PM

Telephone

Problem	Cause & solution
I cannot make or receive calls.	● The AC adaptor or telephone line cord is not connected. Check the connections. ● If you are using a splitter to connect the unit, remove the splitter and connect the unit to the wall socket directly. If the unit operates properly, check the splitter. ● Disconnect the base unit from the telephone line and connect the line to a known working telephone. If the working telephone operates properly, contact our service personnel to have the unit repaired. If the working telephone does not operate properly, contact your service provider. ● The dialling mode setting is incorrect. Set to **"Tone"** or **"Pulse"** as needed (page 10). ● The call bar feature is turned on. Turn it off (page 21). ● You dialled a call restricted number (page 25). ● The key lock feature is turned on. Turn it off (page 12).
The unit does not ring.	● The ringer volume is turned off. Adjust the handset ringer volume (page 18) and the base unit ringer volume (page 24). ● The night mode feature is turned on. Turn it off (page 19, 24).
The batteries should be charging but the battery icon does not change.	● Clean the charge contact and charge again (page 8). ● The AC adaptor is disconnected. Plug in the AC adaptor.
A busy tone is heard when 【 】 is pressed.	● The handset is too far from the base unit. Move closer and try again. ● Another handset is on an outside call. Wait for the other user to complete the call.
Static is heard, sound cuts in and out. Interference from other electrical units.	● Locate the handset and the base unit away from other electrical appliances. ● Move closer to the base unit. ● Your unit is connected to a telephone line with DSL service. We recommend connecting a filter (contact your DSL service provider) to the telephone line between the base unit and the telephone line jack.

TCD200FX(e-e).book Page 39 Monday, February 7, 2005 1:19 PM

Problem	Cause & solution
The handset stops working while being used.	● Disconnect the AC adaptor and turn off the handset. Connect the AC adaptor, turn on the handset and try again.
While storing an entry in the phonebook or assigning a one touch dial, the handset starts to ring.	● A call is being received. To answer the call, press 【↷】. Programming will be cancelled. Start again.
Pressing 【↺】 does not display/dial the last number dialled.	● The redialled number was more than 24 digits long. Redial the number manually.
The handset beeps intermittently and/or ▭ flashes.	● Fully charge the batteries (page 8).
I fully charged the batteries, but ▭ still flashes.	● Clean the charge contact and charge again (page 8). ● It is time to replace the batteries (page 9).
Caller information is not displayed.	● You must subscribe to Caller ID service. ● Your unit is connected to a telephone line with DSL service. We recommend connecting a filter (contact your DSL service provider) to the telephone line between the base unit and the telephone line jack.
While viewing caller information, the display returns to standby mode.	● Do not pause for over 1 minute while searching.
I cannot register a handset to a base unit.	● The maximum number of base units (4) are already registered to the handset. Cancel unused base unit registrations from the handset (page 32). ● The maximum number of handsets (6) are already registered to the base unit. Cancel unused handset registrations from the base unit (page 31). ● You entered the wrong PIN number. If you forget your PIN, consult your nearest Panasonic service centre. ● Locate the handset and the base unit away from other electrical appliances.

TCD200FX(e-e).book Page 40 Monday, February 7, 2005 1:19 PM

Specifications

■ **Standard:**
DECT (Digital Enhanced Cordless Telecommunications),
GAP (Generic Access Profile)

■ **Number of channels:**
120 Duplex Channels

■ **Frequency range:**
1.88 GHz to 1.9 GHz

■ **Duplex procedure:**
TDMA (Time Division Multiple Access)

■ **Channel spacing:**
1,728 kHz

■ **Bit rate:**
1,152 kbit/s

■ **Modulation:**
GFSK (Gaussian Frequency Shift Keying)

■ **RF transmission power:**
Approx. 250 mW

■ **Power source:**
220–240 V, 50 Hz

■ **Power consumption, Base unit:**
Standby: Approx. 3.5 W
Maximum: Approx. 9.2 W

■ **Operating conditions:**
5 °C–40 °C, 20 %–80 % relative air humidity (dry)

■ **Dimensions:**
Base unit: Approx. 111 mm × 121 mm × 123 mm
Handset: Approx. 148 mm × 48 mm × 32 mm

■ **Mass (weight):**
Base unit: Approx. 200 g
Handset: Approx. 130 g

Note:

- Specifications are subject to change.
- The illustrations used in these operating instructions may differ slightly from the actual product.

Connections:

The unit will not work during a power failure. We recommend you connect a standard telephone on the same line for power protection.

TCD200FX(e-e).book Page 41 Monday, February 7, 2005 1:19 PM

Index

A Alarm: *18*
Answering calls: *13*
Auto talk: *13*, *21*

B Base unit
- Additional base units: *30*
- Cancelling: *32*
- PIN: *26*
- Resetting: *26*
- Selecting: *31*
- Settings: *23*

Battery
- Charge: *8*
- Installation: *8*
- Life: *9*
- Replacement: *9*
- Strength: *8*

C Call bar: *21*
Caller ID service: *28*
Call restriction: *25*
Category: *14*
- Ringtones: *28*

Chain dial: *16*
Character entry: *35*
Connections: *7*

D Date and time: *10*
Dialling mode: *10*
Display
- Contrast: *20*
- Icons: *7*
- Language: *20*
- Standby mode: *20*

E Emergency numbers: *25*

H Handset
- Additional handsets: *30*
- Cancelling: *31*
- Locator: *13*
- PIN: *21*
- Power on/off: *9*
- Registration: *30*
- Resetting: *22*
- Settings: *17*

I Intercom: *32*

K Key lock: *12*
Keytones: *21*

M Making calls: *11*
Missed calls: *28*
Mute: *12*

N Night mode
- Base unit: *24*
- Handset: *19*

O One touch dial: *15*

P Pause: *12*, *25*
Phonebook: *14*
- Copying: *16*
- Editing: *15*
- Erasing: *15*
- Making calls: *14*
- Storing: *14*

PIN
- Base unit: *26*
- Handset: *21*

Power on/off: *9*

R Recall: *25*
Redialling: *11*
Redial list: *11*
Registration: *30*
Repeater: *32*
Ringtones: *18*

S Speakerphone: *11*

T Temporary tone dialling: *13*
Transfer calls: *33*

V Voice enhancer: *12*
Volume
- Receiver: *11*
- Ringer (Base unit): *24*
- Ringer (Handset): *18*
- Speakerphone: *11*

W Wall mounting: *34*

TCD200FX(e-e).book Page 42 Monday, February 7, 2005 1:19 PM

TCD200FX(e-e).book Page 43 Monday, February 7, 2005 1:19 PM

TCD200FX(e-e).book Page 44 Monday, February 7, 2005 1:19 PM

CE0436

1999/5/EC

Panasonic Communications Zhuhai Co., Ltd.
3 Ping Xi 8 Lu, Nanping Keji Gongye Yuan, Zhuhai, Guangdong, China 519060

Copyright:
This material is copyrighted by Panasonic Communications Co., Ltd., and may be reproduced for internal use only. All other reproduction, in whole or in part, is prohibited without the written consent of Panasonic Communications Co., Ltd.

© 2005 Panasonic Communications Co., Ltd. All Rights Reserved.

PQQX14521ZA CC0205FW0